HIGHWAY BRIDGE ON COLTON AVENUE AT LYTLE CREEK

SAN BERNARDINO COUNTY, CALIFORNIA

APRIL 1936 — ALL SCALES AS SHOWN

DESIGNED BY - OFFICE OF COUNTY SURVEYOR
H.L. WAY — COUNTY SURVEYOR
J.P. KEMMERER — DEP. CO. SUR.

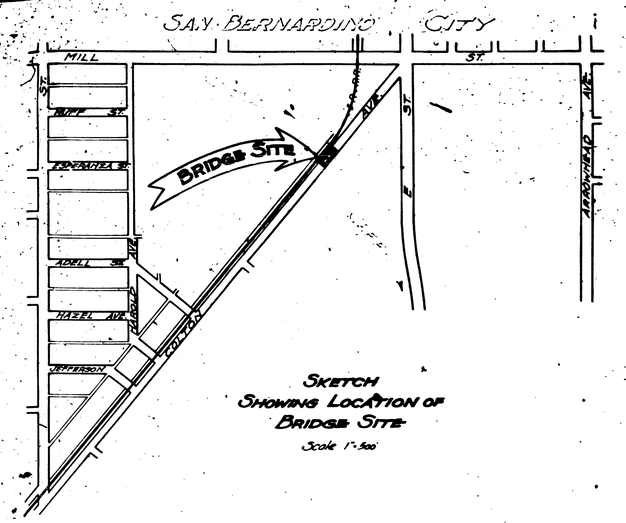

SKETCH SHOWING LOCATION OF BRIDGE SITE
Scale 1"=500'

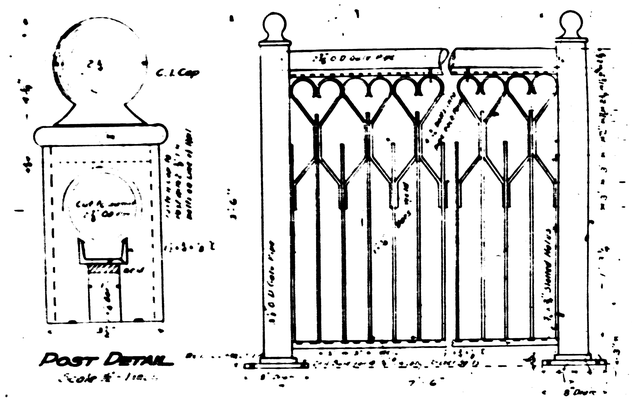

POST DETAIL
Scale ½"=1 ft.

RAIL PANEL
Scale ½"=1 ft.

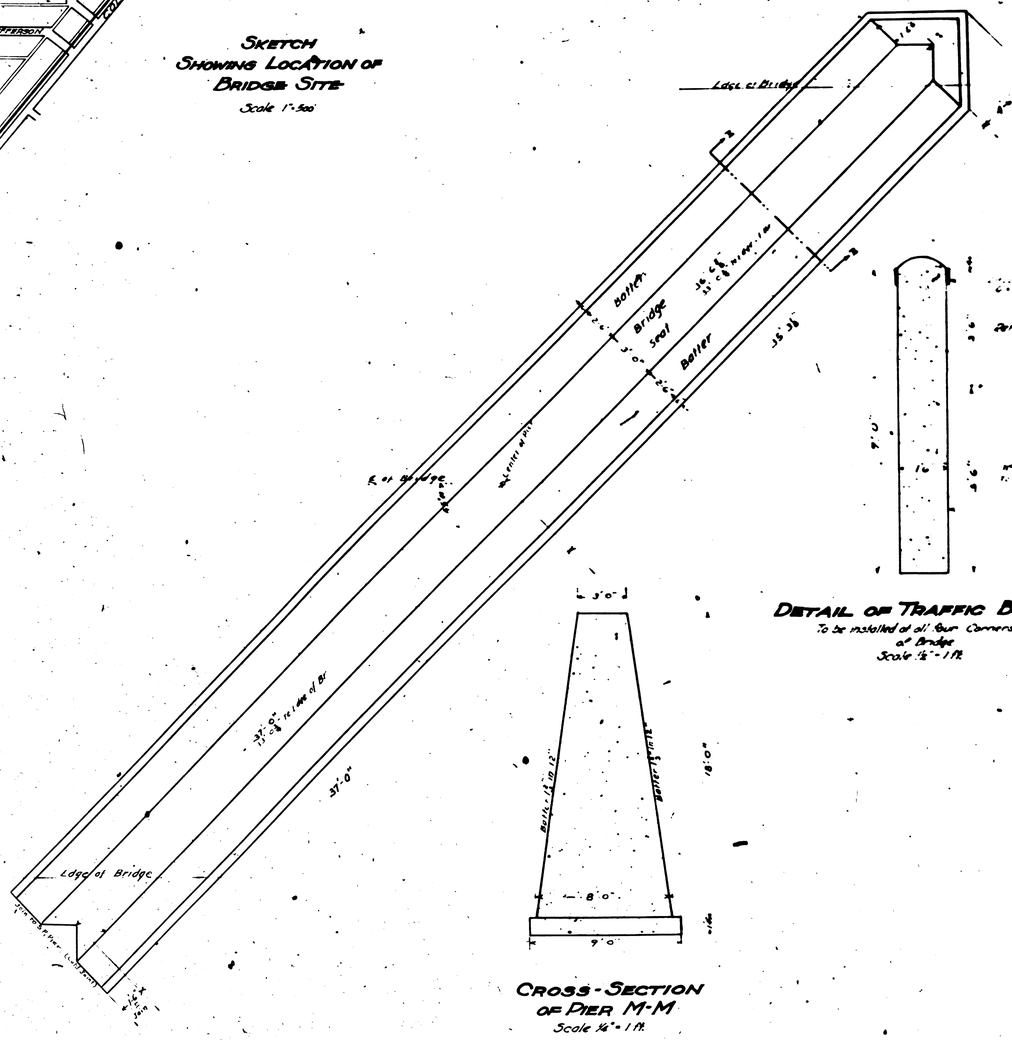

PLAN OF PIER
Scale ¼"=1 ft.

CROSS-SECTION OF PIER M-M
Scale ¼"=1 ft.

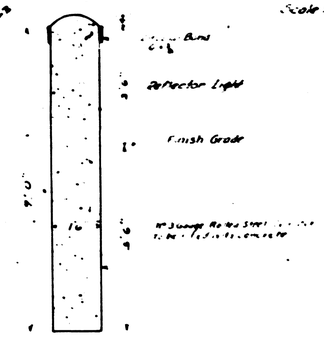

DETAIL OF TRAFFIC BUMPER
To be installed at all four Corners of Bridge
Scale ½"=1 ft.

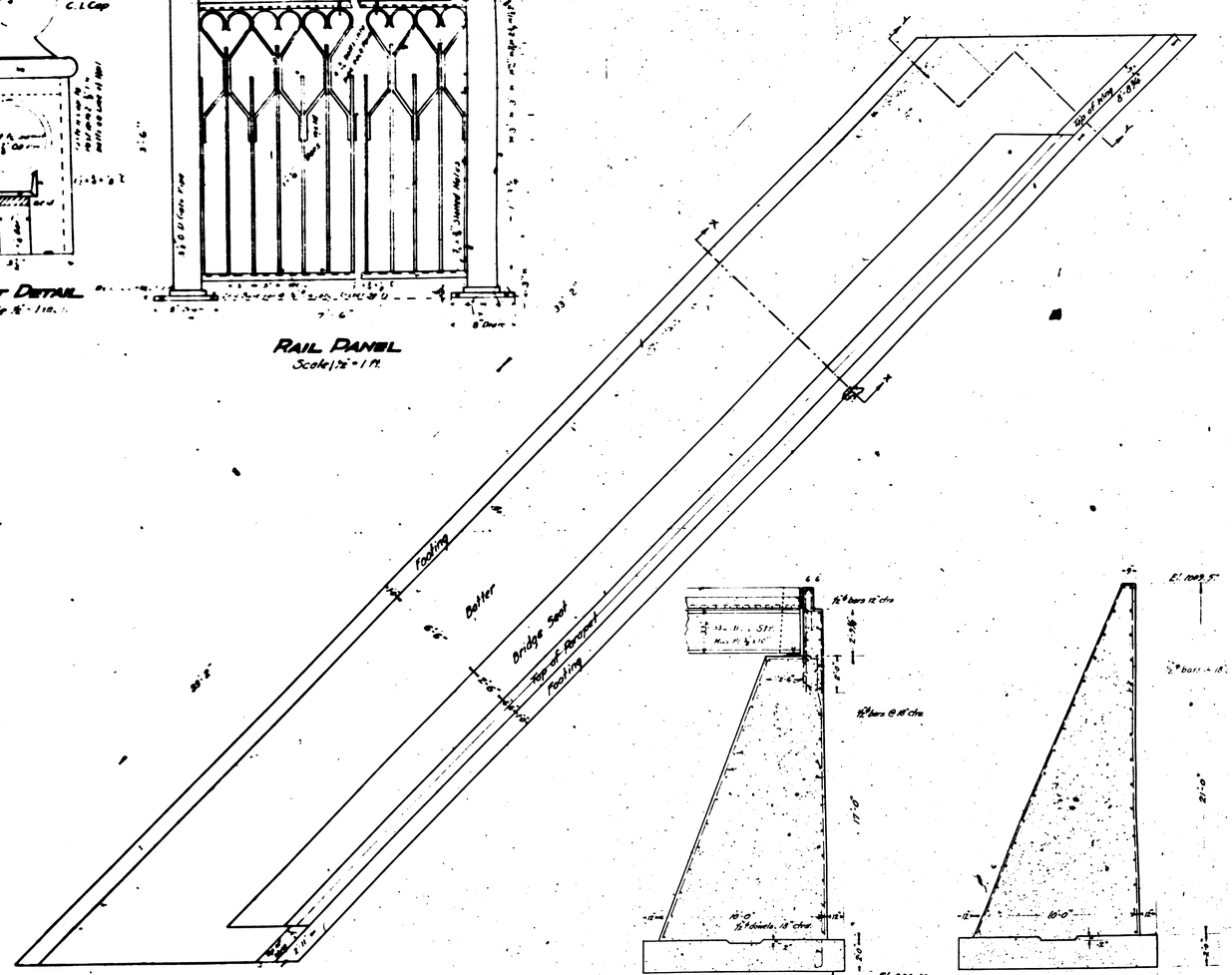

PLAN OF ABUTMENT No. 2
Scale ¼"=1 ft.

CROSS-SECTION OF ABUTMENT X-X
Scale ¼"=1 ft.

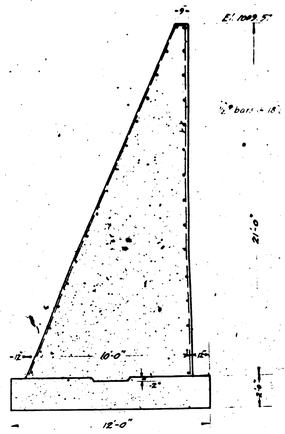

CROSS-SECTION OF WING Y-Y
Scale ¼"=1 ft.

HIGHWAY BRIDGE ON COLTON AVENUE AT LYTLE CREEK

SAN BERNARDINO COUNTY, CALIFORNIA

APRIL 1936 — ALL SCALES AS SHOWN

DESIGNED BY - OFFICE OF COUNTY SURVEYOR
H.L. WAY — COUNTY SURVEYOR
J.P. KEMMERER — DEP. CO. SUR.

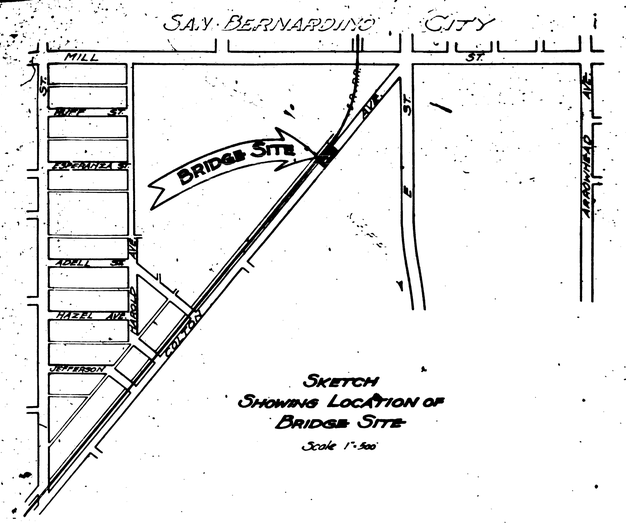

SKETCH SHOWING LOCATION OF BRIDGE SITE
Scale 1"=500'

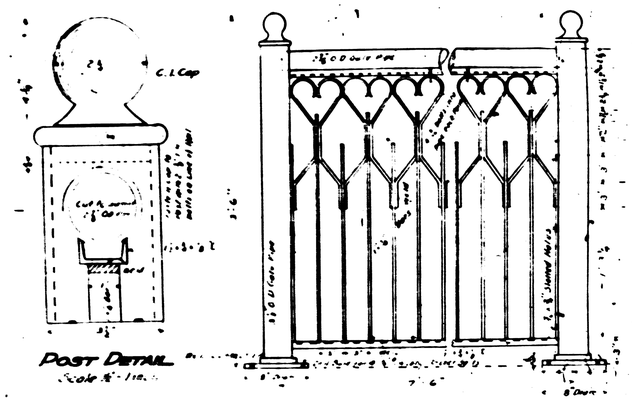

POST DETAIL
Scale ½"=1 ft.

RAIL PANEL
Scale ½"=1 ft.

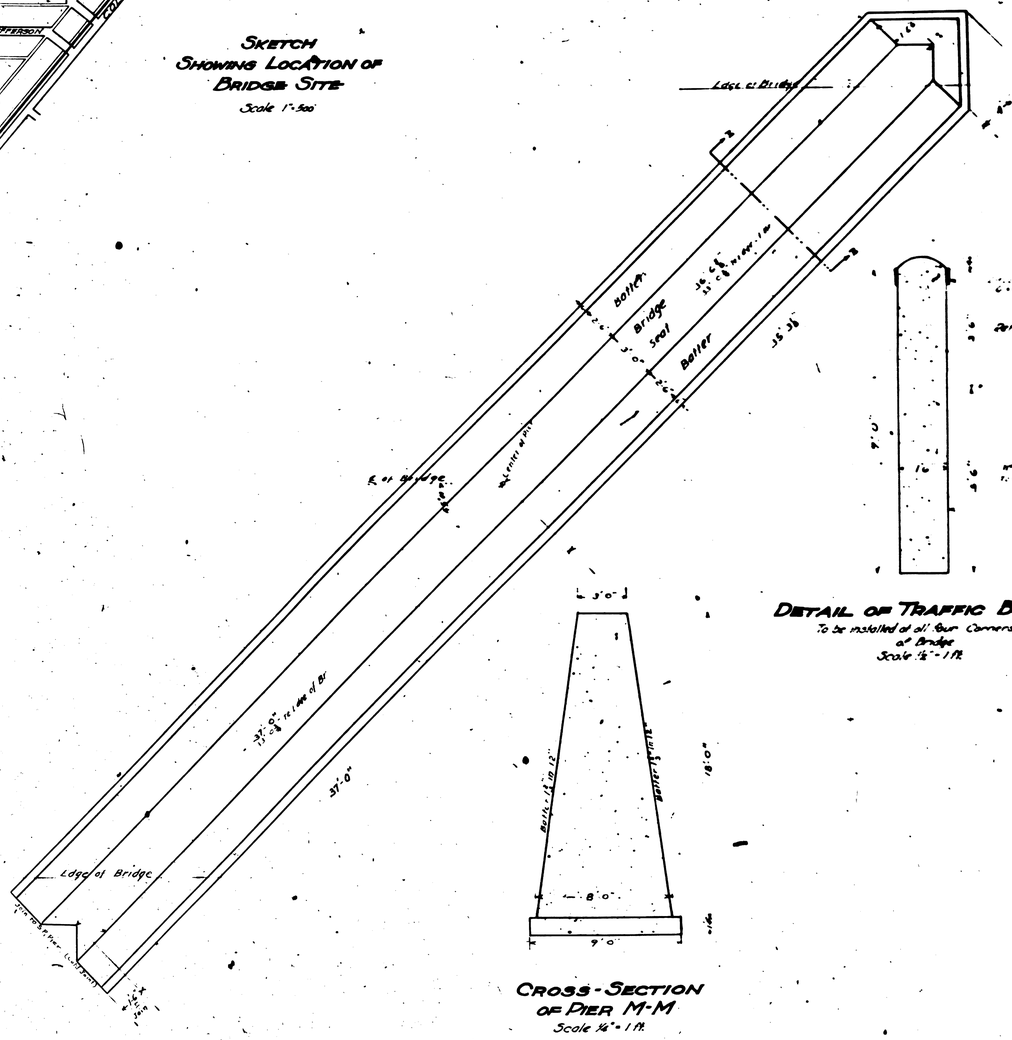

PLAN OF PIER
Scale ¼"=1 ft.

CROSS-SECTION OF PIER M-M
Scale ¼"=1 ft.

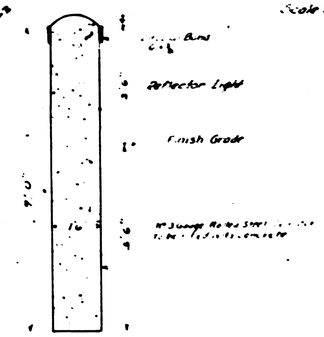

DETAIL OF TRAFFIC BUMPER
To be installed at all four Corners of Bridge
Scale ½"=1 ft.

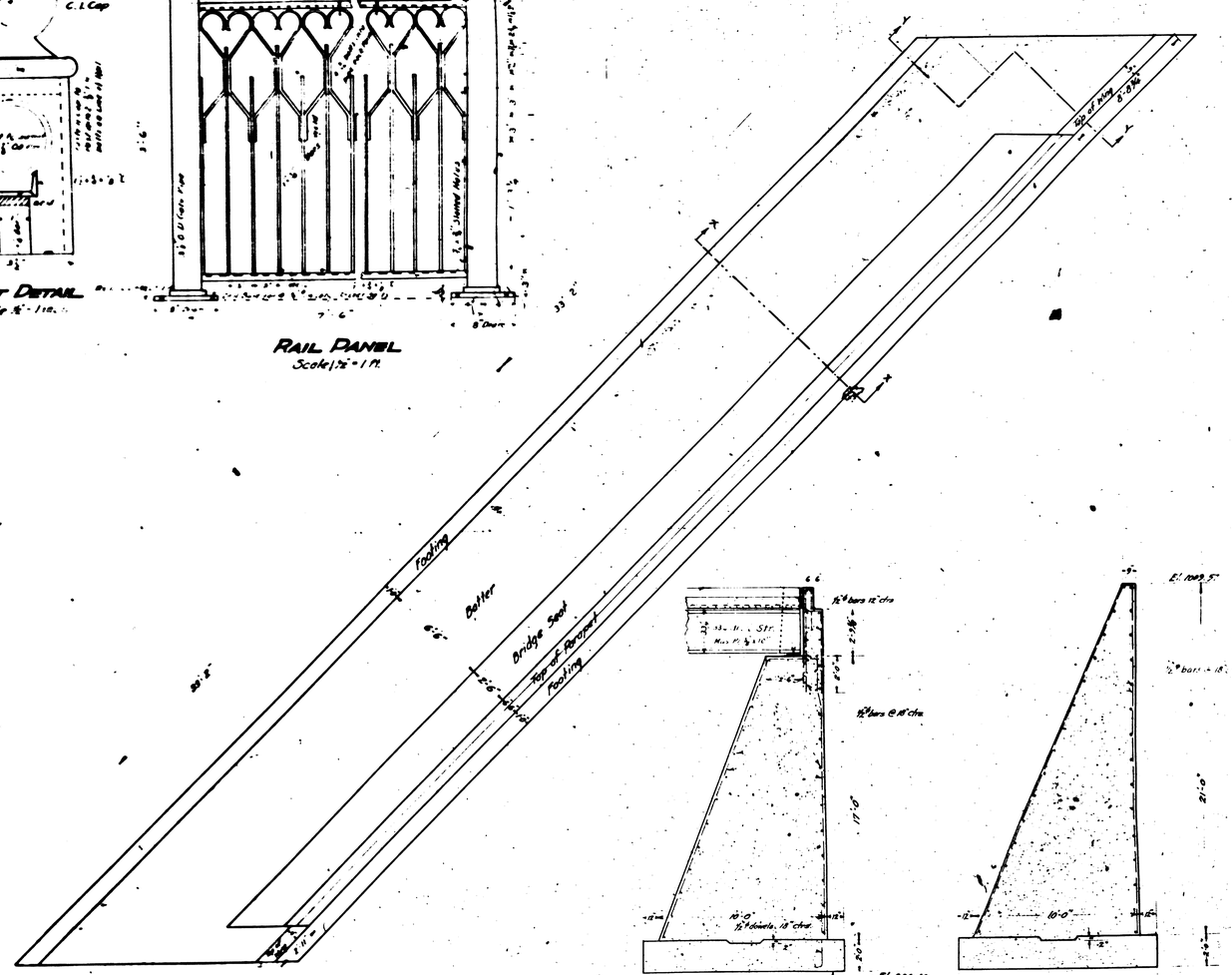

PLAN OF ABUTMENT No. 2
Scale ¼"=1 ft.

CROSS-SECTION OF ABUTMENT X-X
Scale ¼"=1 ft.

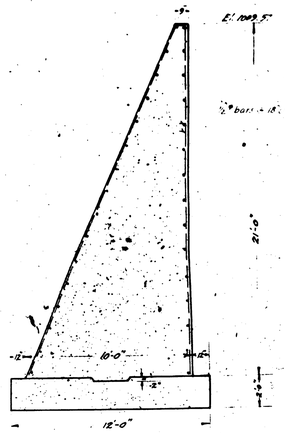

CROSS-SECTION OF WING Y-Y
Scale ¼"=1 ft.